HUMICAP® Humidity and Temperature Transmitters HMT120 and HMT130



Features

- Accurate and reliable measurement with Vaisala HUMICAP® humidity sensor technology
- Interchangeable probe (easy field calibration)
- Resistant to dust and most chemicals
- Enclosure IP65
- Traceable calibration certificate: 3 points for humidity, 1 point for temperature
- Temperature-only models TMT120 and TMT130 also available
- Suitable for cleanrooms and demanding HVAC and light industrial applications

Vaisala HUMICAP® Humidity and Temperature Transmitters HMT120 and HMT130 are designed for humidity and temperature monitoring in cleanrooms and are also suitable for demanding HVAC and light industrial applications.

Options

- Humidity parameter options: relative humidity, dew point/frost point, wet bulb temperature, enthalpy, absolute humidity, mixing ratio, vapor pressure, and saturation vapor pressure
- 2-wire loop-powered or 3-wire voltage output configurations
- Optional LCD display
- USB cable available for a PC connection for maintenance
- Wall-mounted or with a remote probe
- Constant output probe available
- Can be mounted outdoors using a Vaisala installation kit and Vaisala Radiation Shield DTR504A

Performance

The HMT120 and HMT130 transmitters incorporate Vaisala HUMICAP® humidity sensor technology that measures relative humidity accurately and reliably. Vaisala HUMICAP® sensors are resistant to dust and most chemicals.

The HMT120 and HMT130 transmitter enclosure is optimized for use in cleanrooms. The smooth surface of the enclosure makes it easy to clean and the enclosure material is chosen to tolerate purifying agents. Furthermore, cabling can be done through the back wall of the transmitter.

Interchangeable probe

The HMT120 and HMT130 transmitters use a fully interchangeable relative humidity probe. The probe can be easily removed and replaced with a new one without having to adjust the transmitter, which allows for easy and quick recalibration of the transmitter. The probe can be adjusted using one of Vaisala's handheld meters as a reference.

Also available is a constant output probe with fixed RH and T output for convenient inspection of the monitoring system and signal transfer line.

Available options

The HMT120 and HMT130 transmitters are available as wall mounted or with a remote probe. For high temperature applications or where space is limited, the remote probe is ideal.

The optional LCD display shows the measurement results of selected parameters in selected units. The parameters are displayed simultaneously on two separate rows on the display.

Technical data

Models

Model	Measured parameters	Output
HMT120	RH + T	2 analog outputs, 4 ... 20 mA (loop-powered)
HMT130	RH + T	2 analog outputs, 0 ... 1 V, 0 ... 5 V, 0 ... 10 V, or user-defined between 0 ... 10 V
TMT120	T	1 analog output, 4 ... 20 mA (loop-powered)
TMT130	T	1 analog output, 0 ... 1 V, 0 ... 5 V, 0 ... 10 V, or user-defined between 0 ... 10 V

Measurement performance

Relative humidity [1]	
Measurement range	0 ... 100 %RH
Accuracy [2] [3]	
At 0 ... +40 °C (+32 ... +104 °F)	±1.5 %RH (0 ... 90 %RH) ±2.5 %RH (90 ... 100 %RH)
At −40 ... 0 °C and +40 ... +80 °C (−40 ... +32 °F and +104 ... +176 °F)	±3.0 %RH (0 ... 90 %RH) ±4.0 %RH (90 ... 100 %RH)
Factory calibration uncertainty at +20 °C (+68 °F)	±1.1 %RH (0 ... 90 %RH) ±1.8 %RH (90 ... 100 %RH)
Humidity sensor types	HUMICAP® 180R HUMICAP® 180V
Stability	±2 %RH over 2 years
Stability in typical HVAC applications	±0.5 %RH per year
Temperature	
Measurement range	−40 ... +80 °C (−40 ... +176 °F)
Accuracy over temperature range:	
At +15 ... +25 °C (+59 ... +77 °F)	±0.1 °C (±0.18 °F)
At 0 ... +15 °C and +25 ... +40 °C (+32 ... +59 °F and +77 ... +104 °F)	±0.15 °C (±0.27 °F)
At −40 ... +0 °C and +40 ... +80 °C (−40 ... +32 °F and +104 ... +176 °F)	±0.4 °C (±0.72 °F)
Temperature sensor	Pt1000 RTD Class F0.1 IEC 60751
Other output parameters (optional)	
Dew point/frost point, wet bulb temperature, enthalpy, absolute humidity, mixing ratio, vapor pressure, saturation vapor pressure	

1) *RH specifications excluding TMT120 and TMT130, which are T-only models.*
2) *Including non-linearity, hysteresis, and repeatability.*
3) *With HUMICAP® 180V sensor, accuracy is specified only in operating temperature −20 ... +80 °C (−4 ... +176 °F).*

Operating environment

IP rating (transmitter body)	IP65 [1]
Operating temperature of transmitter body, no display	−40 ... +60 °C (−40 ... +140 °F)
Operating temperature of transmitter body with display	−20 ... +60 °C (−4 ... +140 °F)
Operating temperature, HMP110 probe	−40 ... +80 °C (−40 ... +176 °F)
Storage temperature	−50 ... +70 °C (−58 ... +158 °F)

1) *IP65 for the HMP110 probe only when using stainless steel sintered filter (HM46670SP) or PTFE sintered filter (item code DRW244938SP).*

Inputs and outputs

HMT120 and TMT120 2-wire transmitter (loop-powered)	
Current output signals	4 ... 20 mA
External loop voltage	10 ... 30 VDC (R_L = 0 Ω) 20 ... 30 VDC (R_L < 500 Ω)
HMT130 and TMT130 3-wire transmitter	
Voltage output signals	0 ... 1 V, 0 ... 5 V, 0 ... 10 V or user-defined between 0 ... 10 V
Min. output resistance	1 kΩ
Serial output	RS-485, non-isolated
Relay output	1 relay (max. 50 VDC, 200 mA)
Supply voltage	10 ... 35 VDC 15 ... 35 VDC (when output 0 ... 10 V) 24 VAC (±20 %)
Current consumption at 24 VDC	8 mA, if relay closed 15 mA
Max. additional error caused by the analog outputs after calibration at +20 °C (+68 °F) ambient temperature	±0.1 % of FS output signal
Temperature dependence of the analog outputs	±0.005 % of FS output signal

Mechanical specifications

Weight	270 g (9.5 oz)
Probe cable lengths	3 m, 5 m, 10 m - up to 50 m (9.8 ft, 16 ft, 33 ft - up to 164 ft)
Display (optional)	128 x 64 resolution full graphics B&W display without backlight
Material	
Transmitter housing	PBT plastic
Display window	PC plastic
Probe body	Stainless steel (AISI 316)
Probe grid filter	Chrome coated ABS plastic
Connections	
Inputs and outputs	Screw terminals 0.5 ... 1.5 mm^2 (AWG 20 ... AWG 15)
Probe interface	4-pin M8 female panel connector

Compliance

EU directives	EMC, RoHS
EMC compatibility	EN 61326-1, basic electromagnetic environment CISPR 32 / EN 55032, Class B
Compliance marks	CE, RCM

Spare parts and accessories

Probes	
Humidity and temperature probe	HMP110 [1]
Humidity and temperature replacement probe	HMP110R [1]
Constant output probe	HMP110REF [1]
Sensors	
Standard humidity sensor	HUMICAP180R
Catalytic humidity sensor for H_2O_2	HUMICAP180V
Sensor protection	
Plastic grid filter	DRW010522SP
Plastic grid with membrane filter	DRW010525SP
Stainless steel sintered filter	HM46670SP
PTFE membrane filter with stainless steel grid	ASM212652SP
PTFE sintered filter	DRW244938SP
Probe installation	
Probe mounting clamps, 10 pcs	226067
Probe mounting flange	226061
Probe holder, 5 pcs	ASM213382SP
Cables	
Probe cable 3 m (9.8 ft)	HMT120Z300
Probe cable 5 m (16 ft)	HMT120Z500
Probe cable 10 m (33 ft)	HMT120Z1000
Probe cable 20 m (66 ft)	HMT120Z2000
HM70 connection cable	211339
USB serial interface cable	219685
Transmitter protection and installation	
Radiation shield	DTR504A
Rain shield with installation kit	215109
Duct installation kit	215619

1) See separate order form.

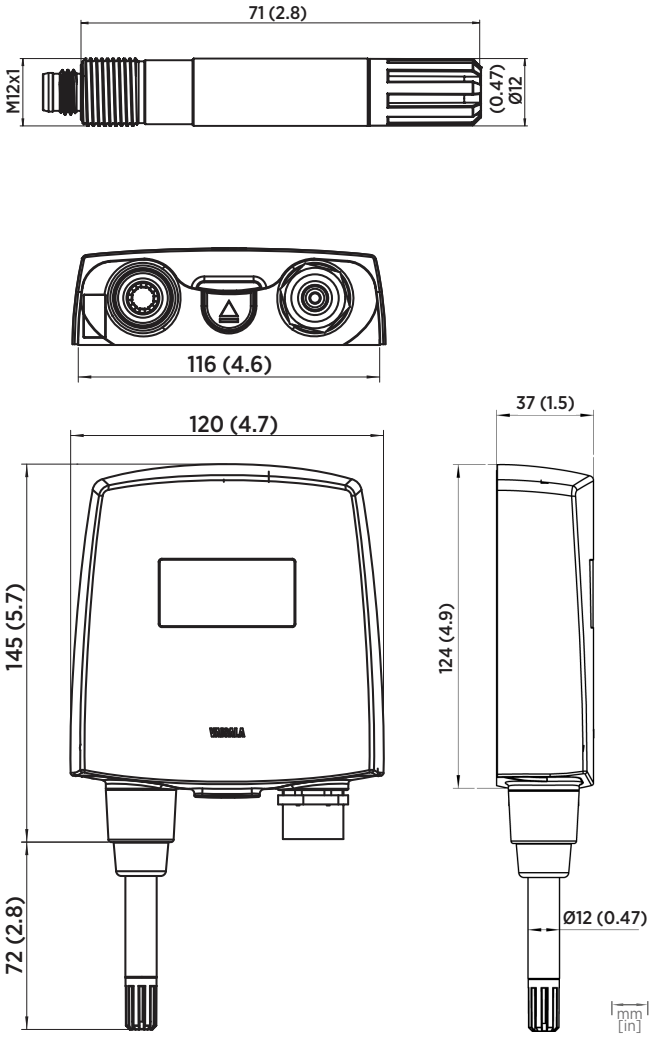

Dimensions of remote probe (top image) and HMT120, HMT130, TMT120, and TMT130 transmitters

VAISALA

www.vaisala.com

Published by Vaisala | B211086EN-L © Vaisala 2021

All rights reserved. Any logos and/or product names are trademarks of Vaisala or its individual partners. Any reproduction, transfer, distribution or storage of information contained in this document is strictly prohibited. All specifications — technical included — are subject to change without notice.